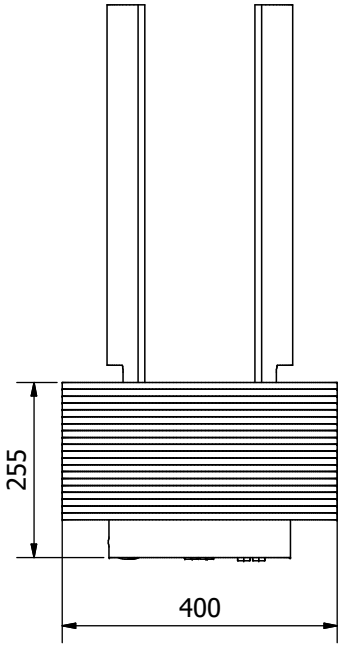

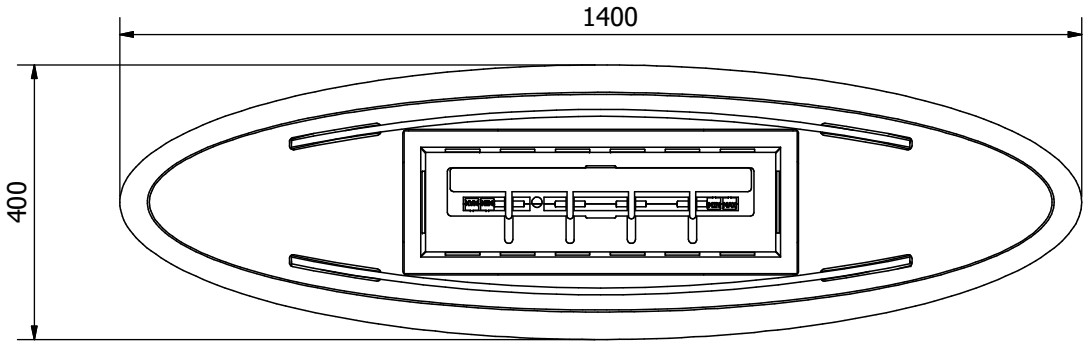

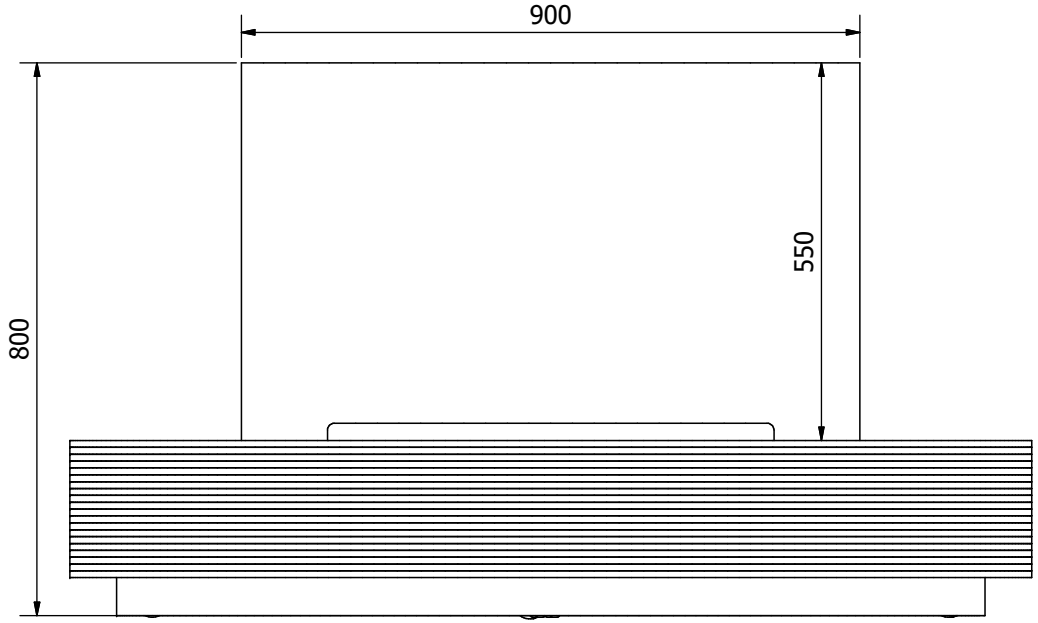

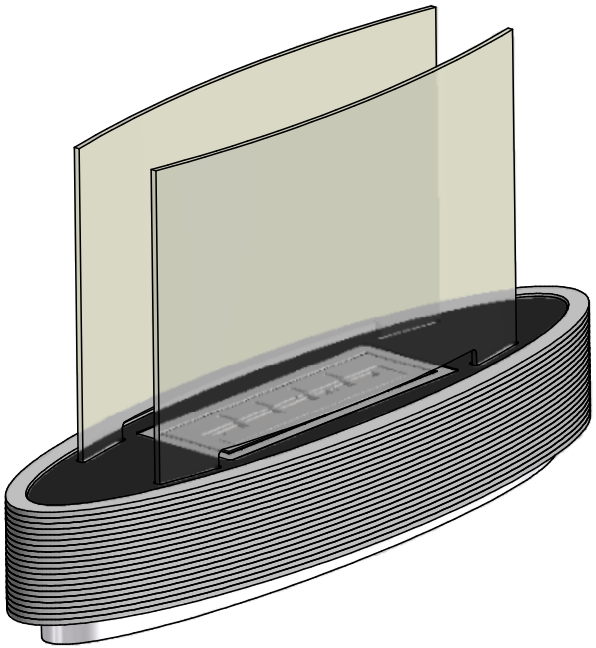

-

Ellipse catalog view

Project No	Ellipse		
Drawing No	Rys.1		
Scale	Format A3	Drawn by Adam	Drawn Date 02/02/2018
Rev.	Approved by	Rev. by	Rev. Date

BIOPASJA